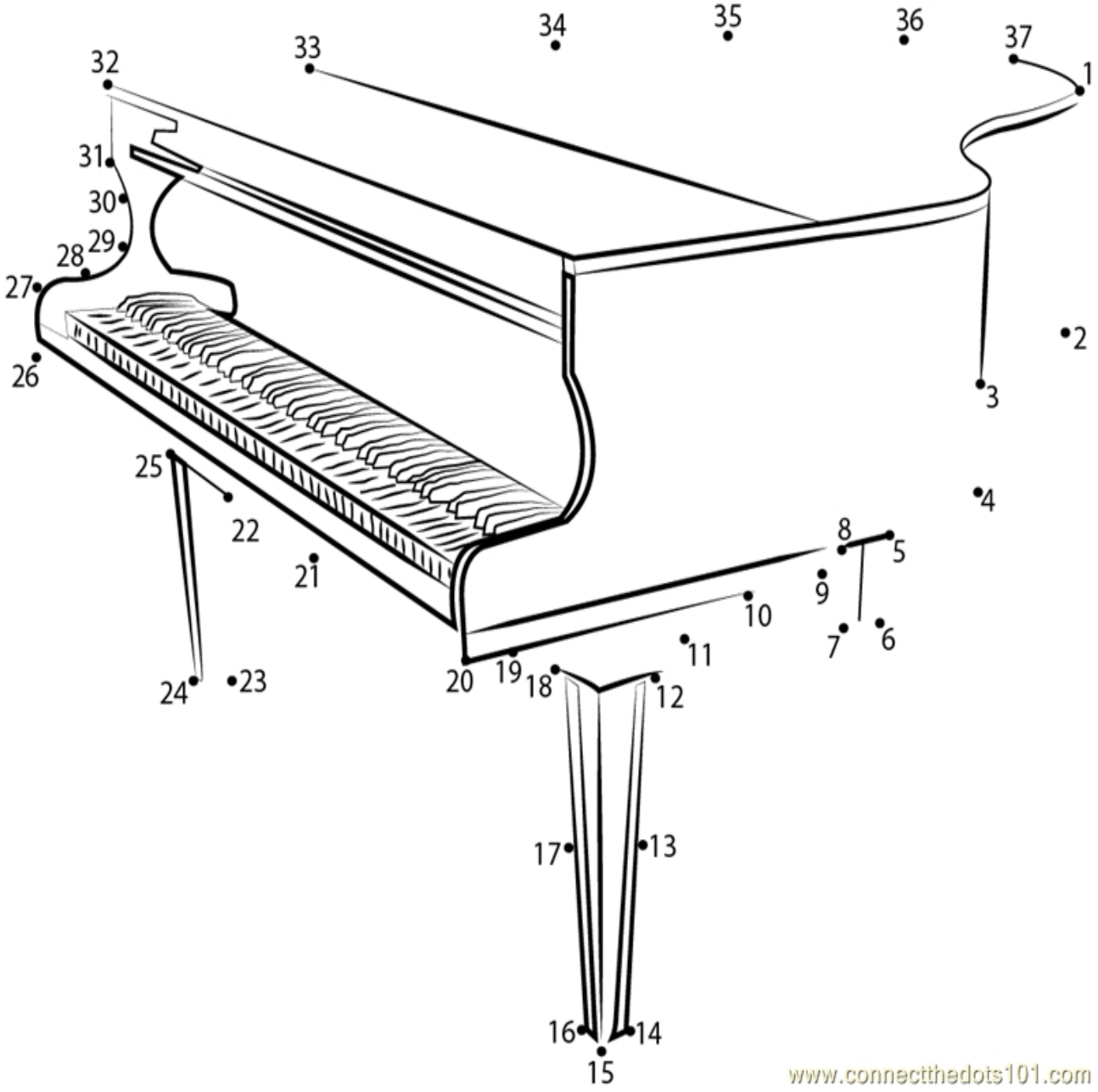
34
35
36
37
33
32
1
31
30
29
28
27
2
26
3
25
4
22
8
5
21
9
10
7
6
11
24
23
20
19
18
12
17
13
16
14
15
www.connectthedots101.com