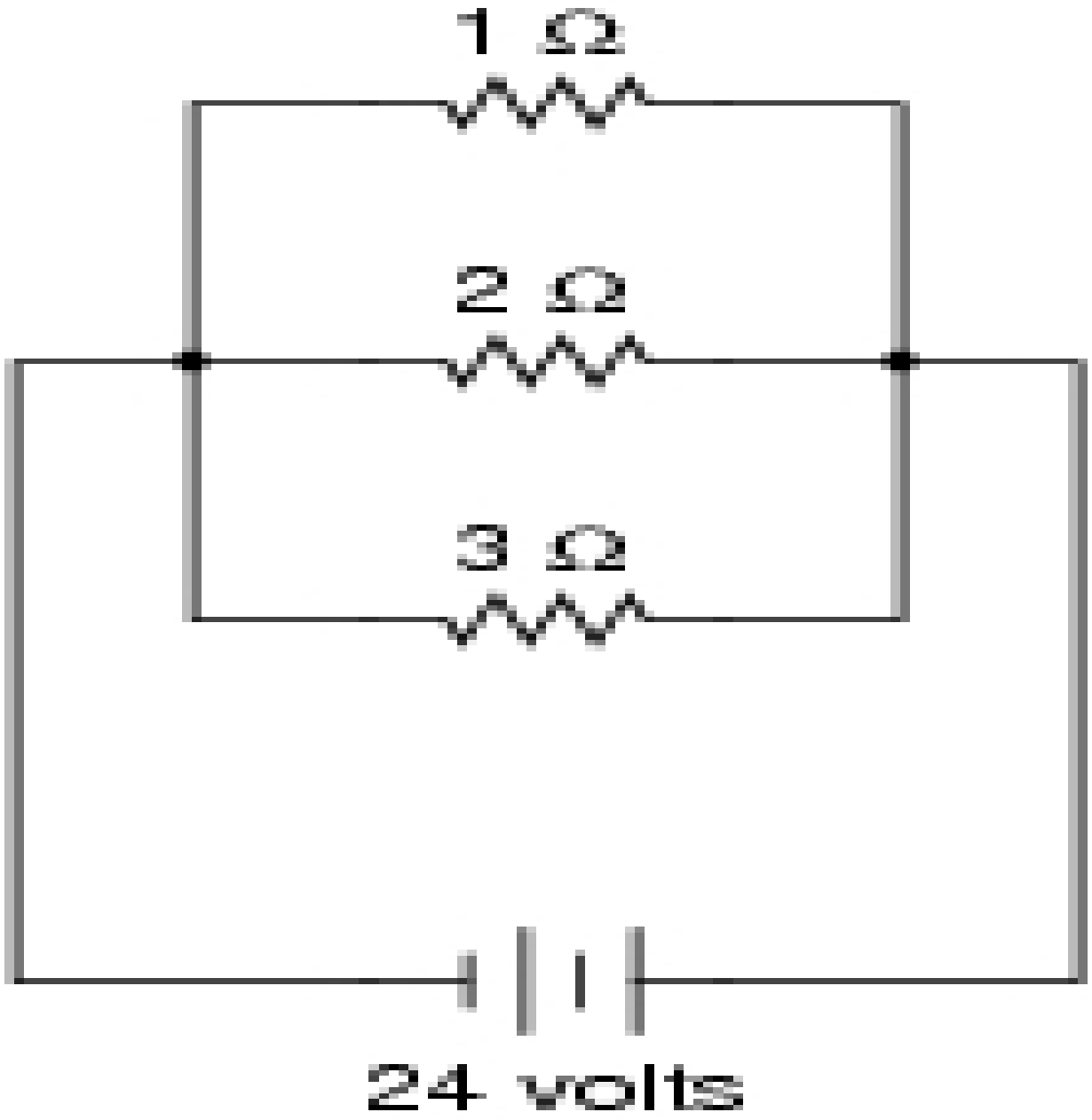
1 Ω
2 Ω
3 Ω
24 volts