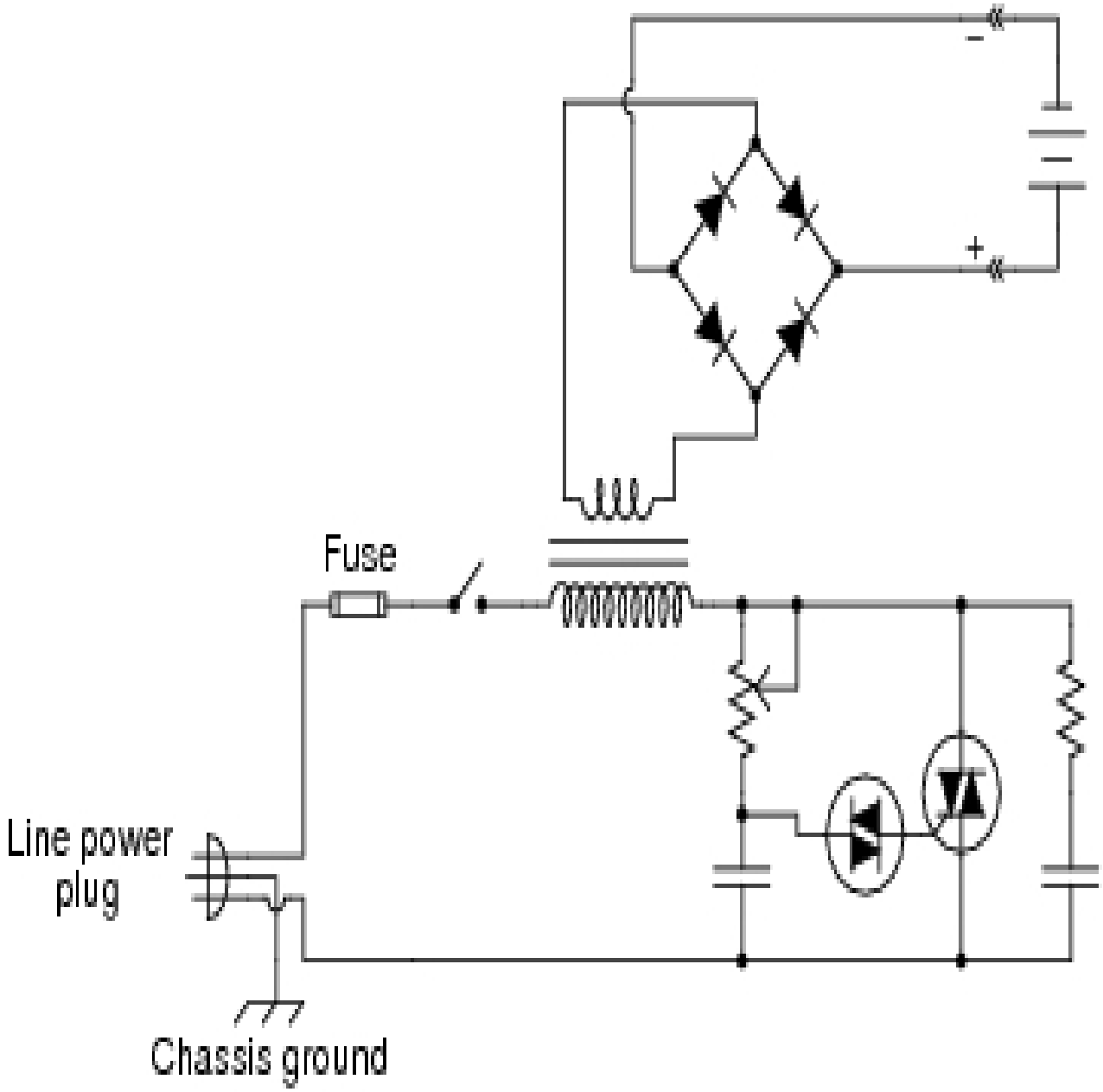
Fuse
Line power
plug
Chassis ground