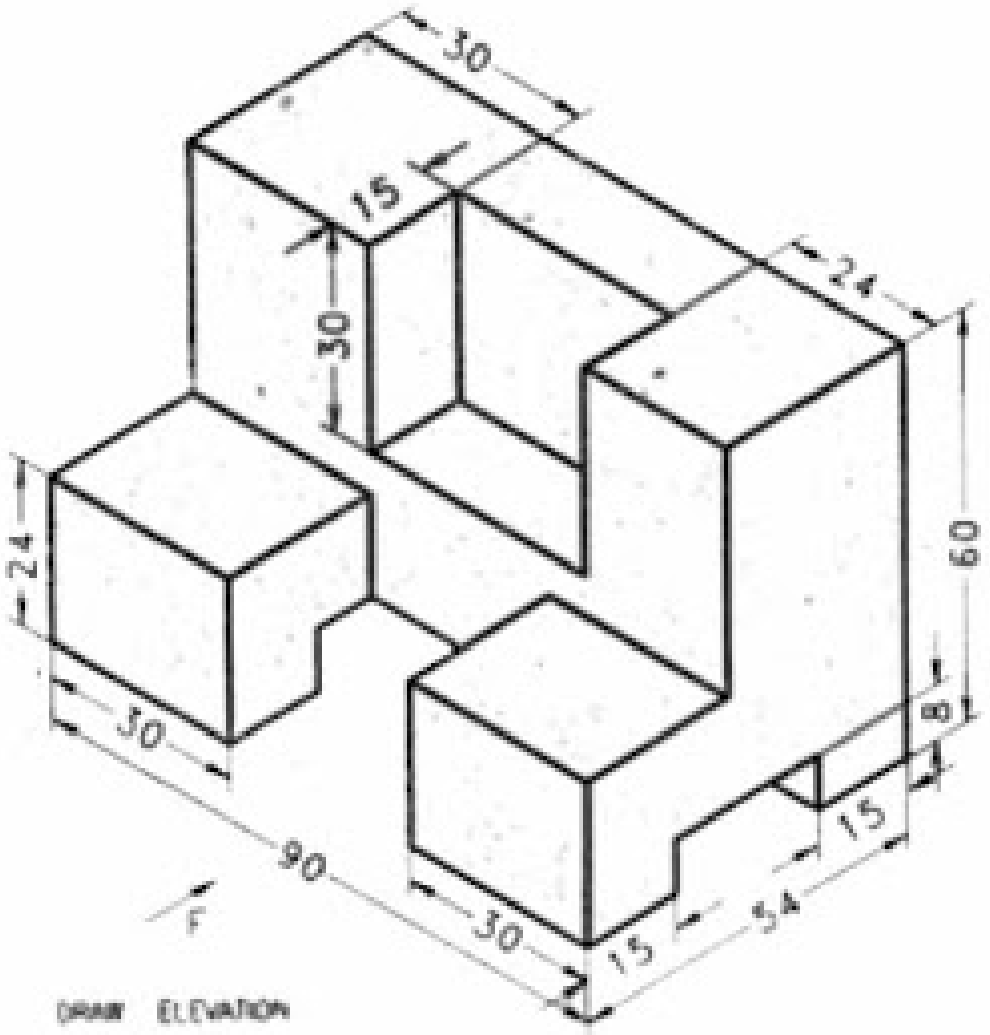

DRAW ELEVATION

PLAN

RIGHT SIDE VIEW

Fig. F1.34 A block