MICROSCOPE PARTS & FUNCTION DIAGRAM

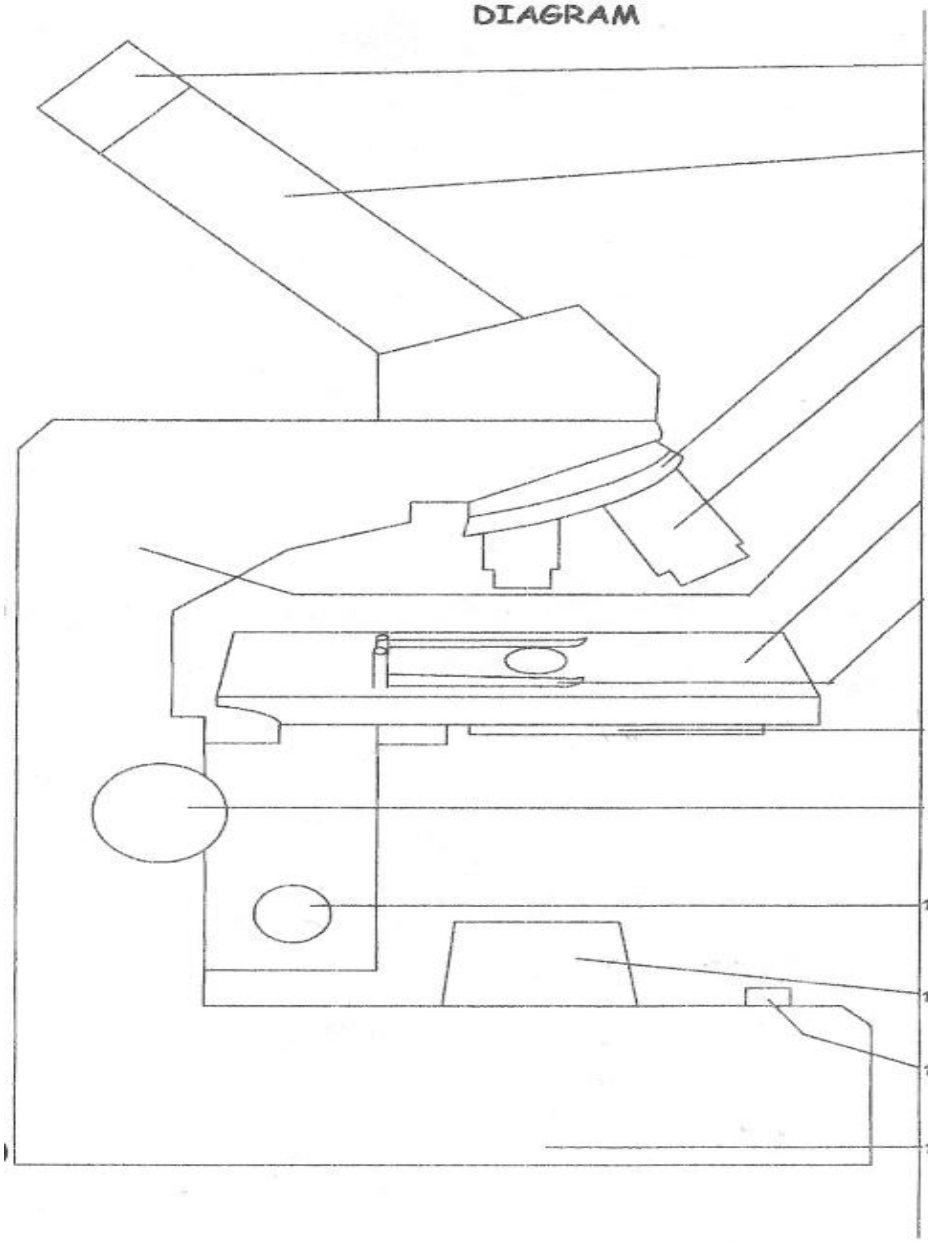

1. ***"EYEPIECE"***
   - magnifies the image
2. ***"TUBE"***
   - separates eyepiece from objectives
3. ***"NOSEPIECE"***
   - turns objectives
4. ***"OBJECTIVE"***
   - magnifies the image
5. ***"NECK" or "ARM"***
   - supports microscope
6. ***"STAGE"***
   - holds slide
7. ***"CLIP"***
   - holds slide to stage
8. ***"DIAPHRAGM"***
   - regulates amount of light
9. ***"COARSE ADJUSTMENT" or "COARSE FOCUS"***
   - moves stage large amount
10. ***"FINE ADJUSTMENT" or "FINE FOCUS"***
    - moves stage small amount
11. ***"LIGHT"***
    - illuminates the image
12. ***"SWITCH"***
    - turns light on/off
13. ***"FOOT" or "BASE"***
    - supports microscope