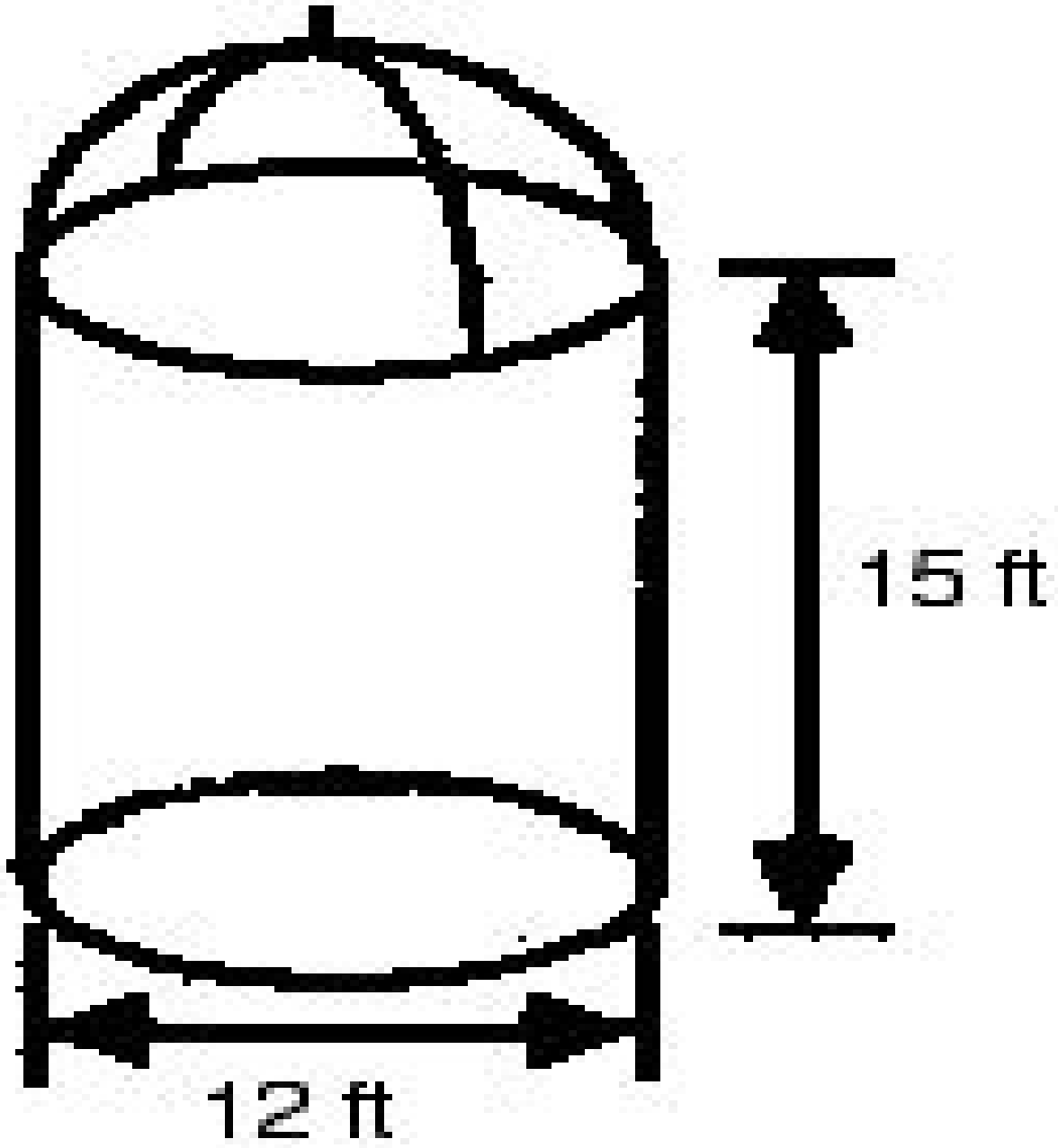
15 ft
12 ft