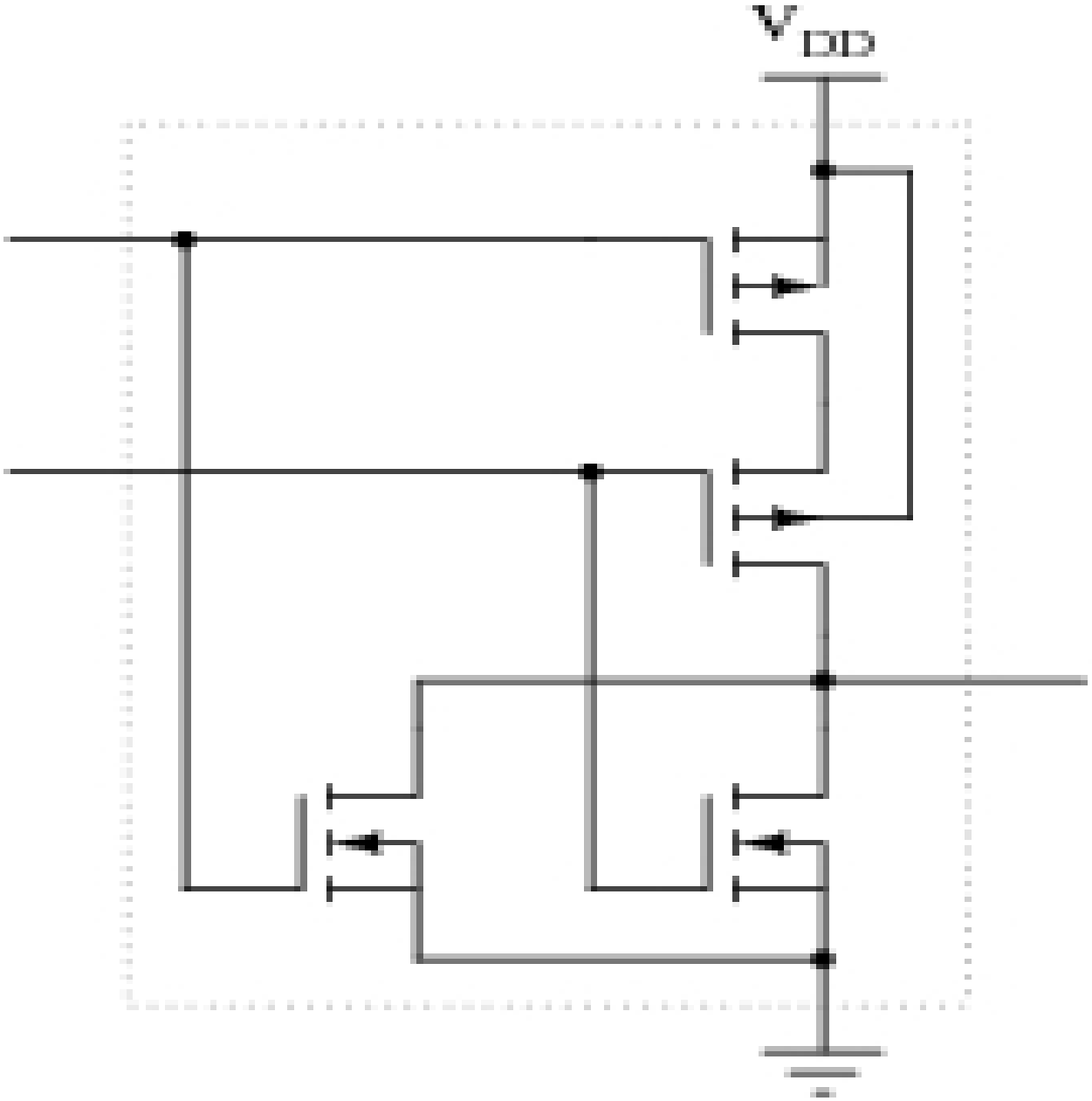
V_{DD}