Properties of 3D shapes

Join each shape to its name.

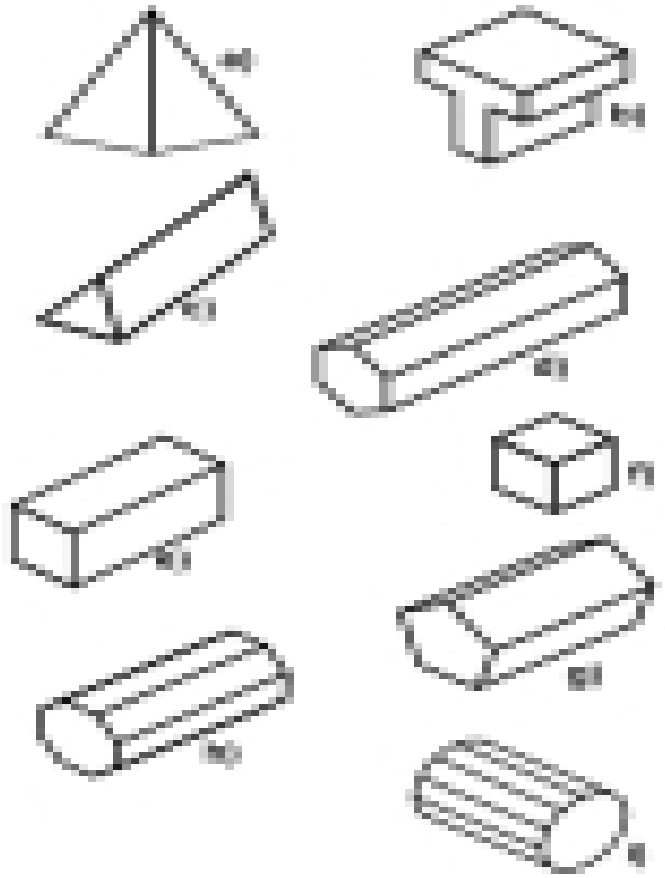

Cube

Triangular Prism

Cuboid

Hexagonal Prism

Cylinder

Pentagonal Prism

"T" Shaped Prism

Octagonal Prism

Pyramid