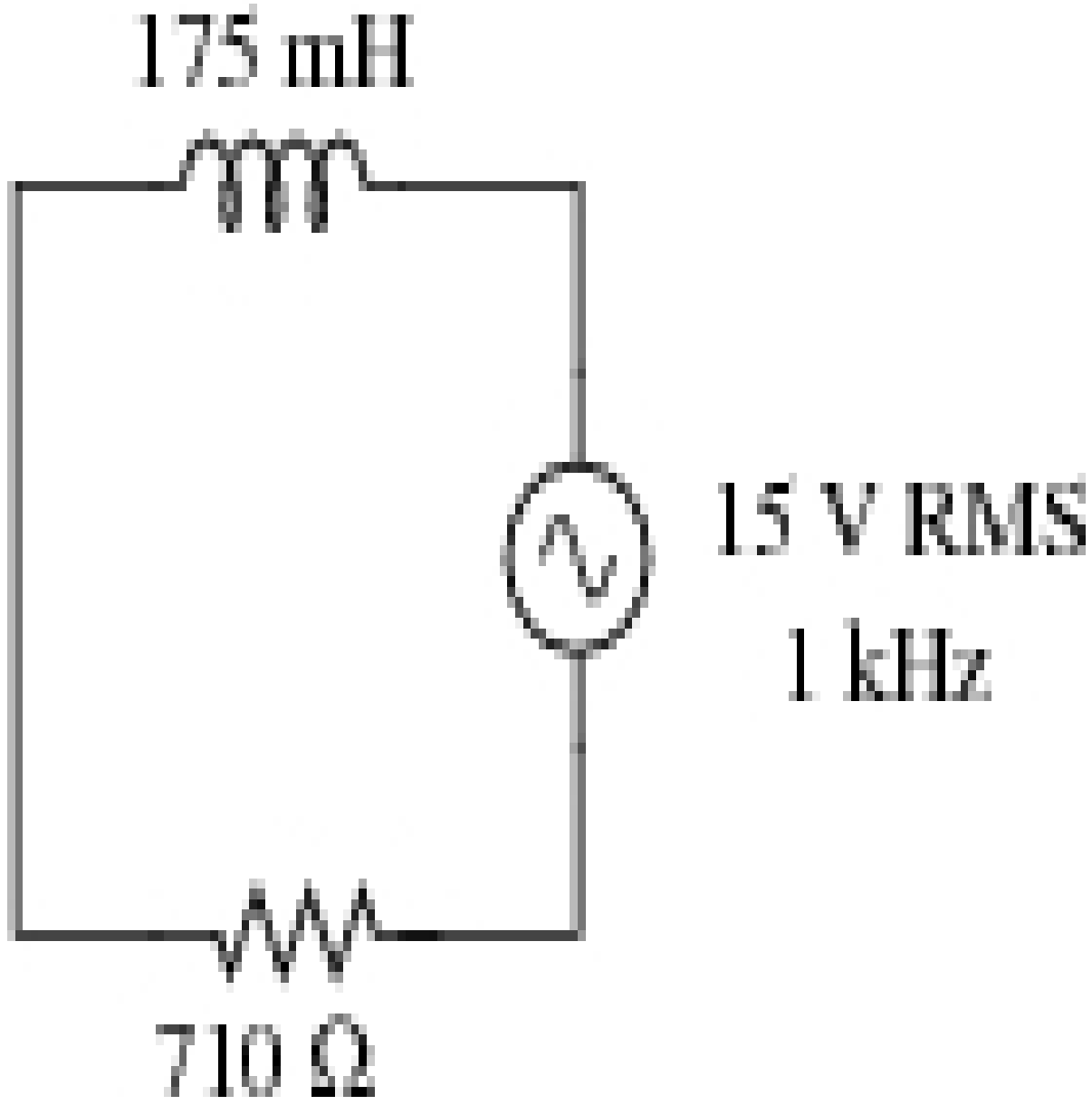
175 mH
15 V RMS
1 kHz
710 Ω