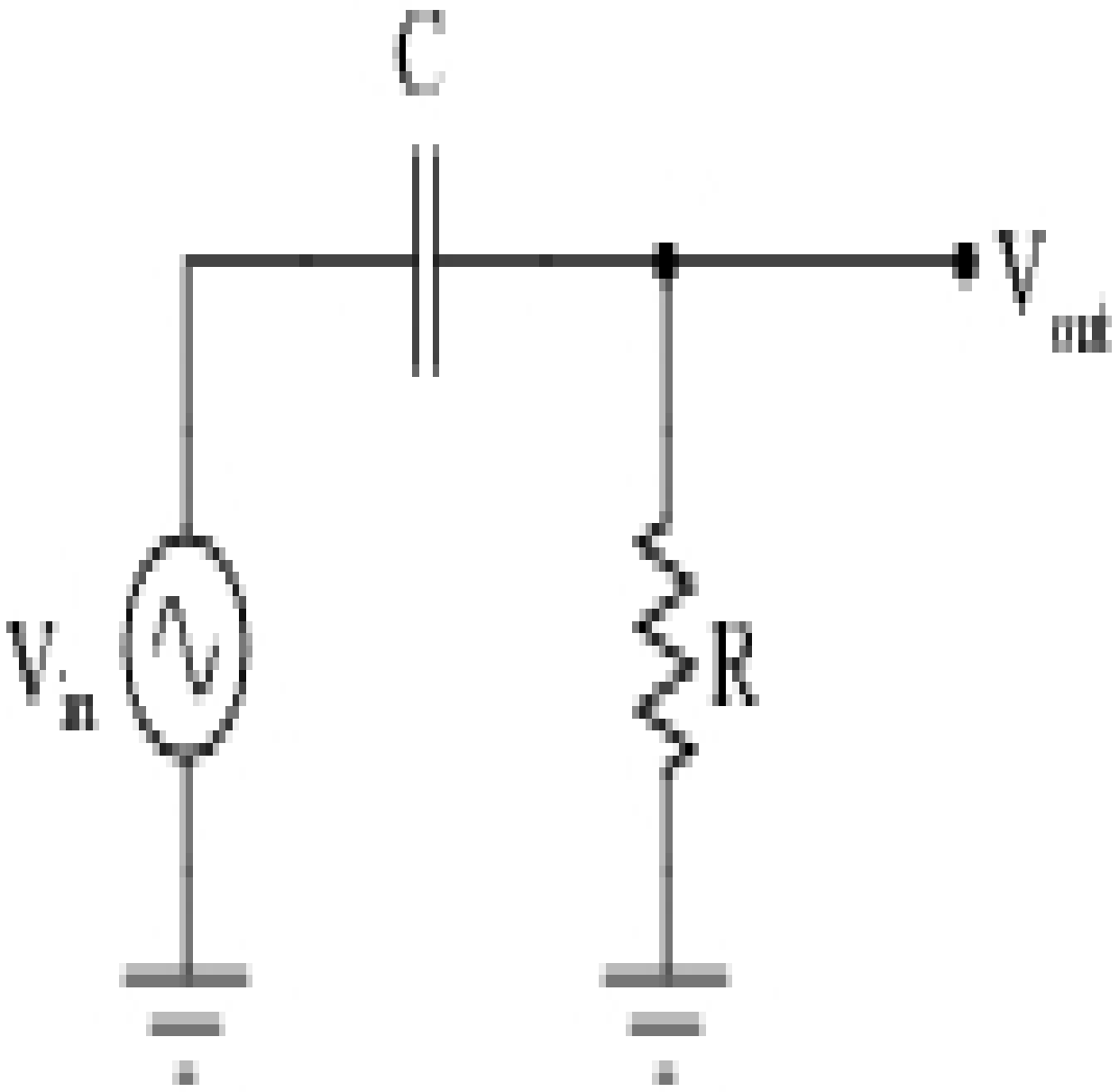
C
V
out
V
in
R