Instructions: Connect traffic signs on the left column with their meanings on the right column by drawing a line between the numbers and letters.

Example: Pedestrians ———→ are people who walk.

1. Traffic signals
2. Urban areas
3. Crosswalks
4. Widely known traffic signals
5. Road signs
6. Road users
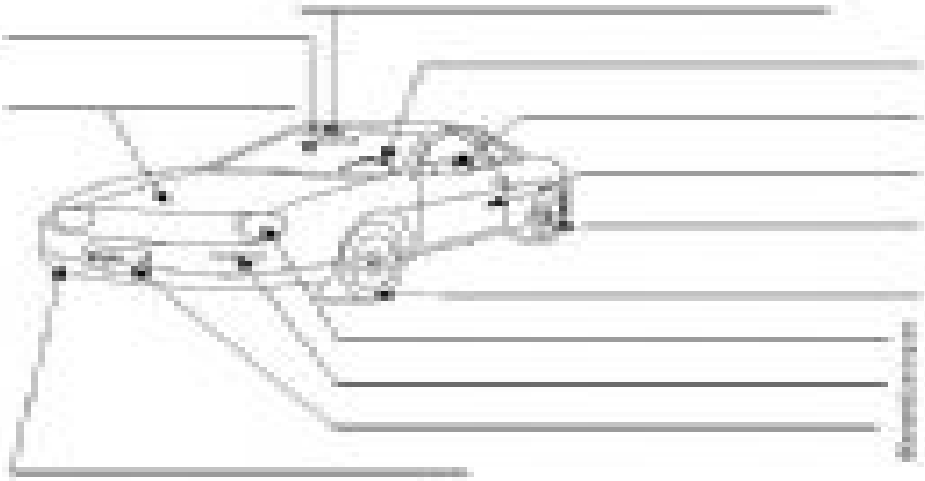
A. are the official power to govern the road.
B. refer drivers to stop signs.
C. are clusters where houses or stores
D. tell drivers to yield.
E. tell drivers self-defense for government.
F. tell people and vehicles how they are safe.