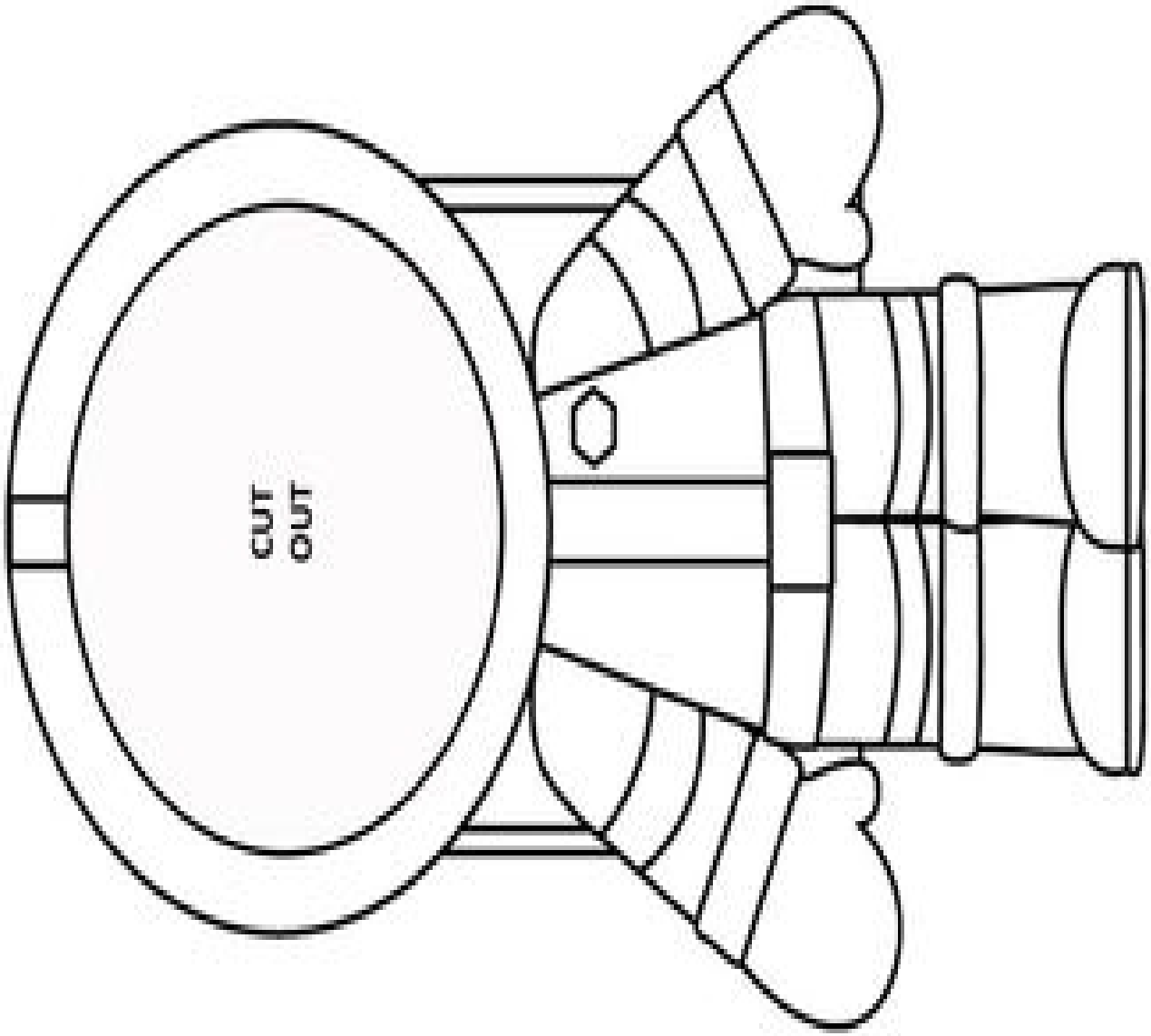
CUT
OUT