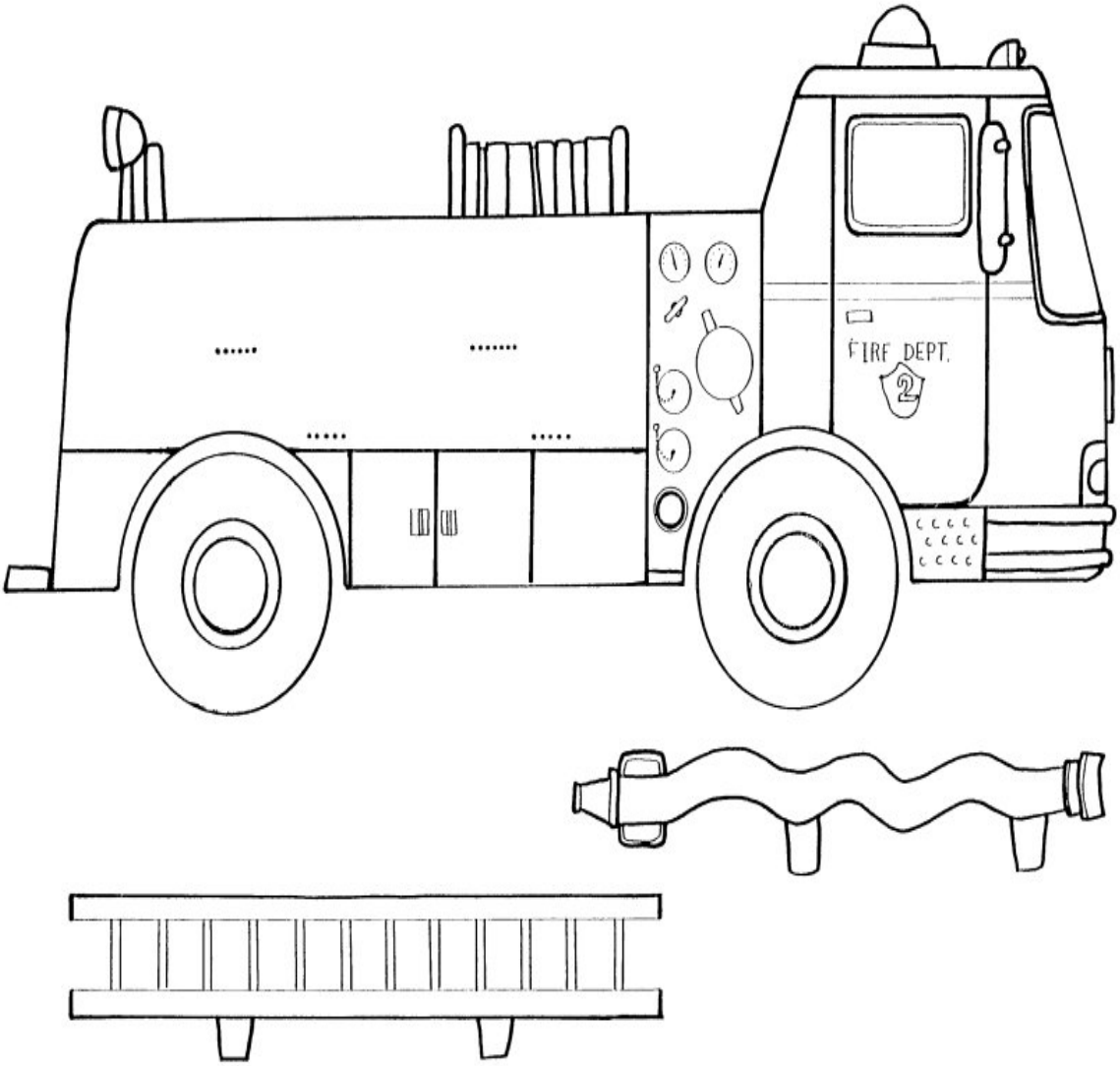
FIRE DEPT.
2