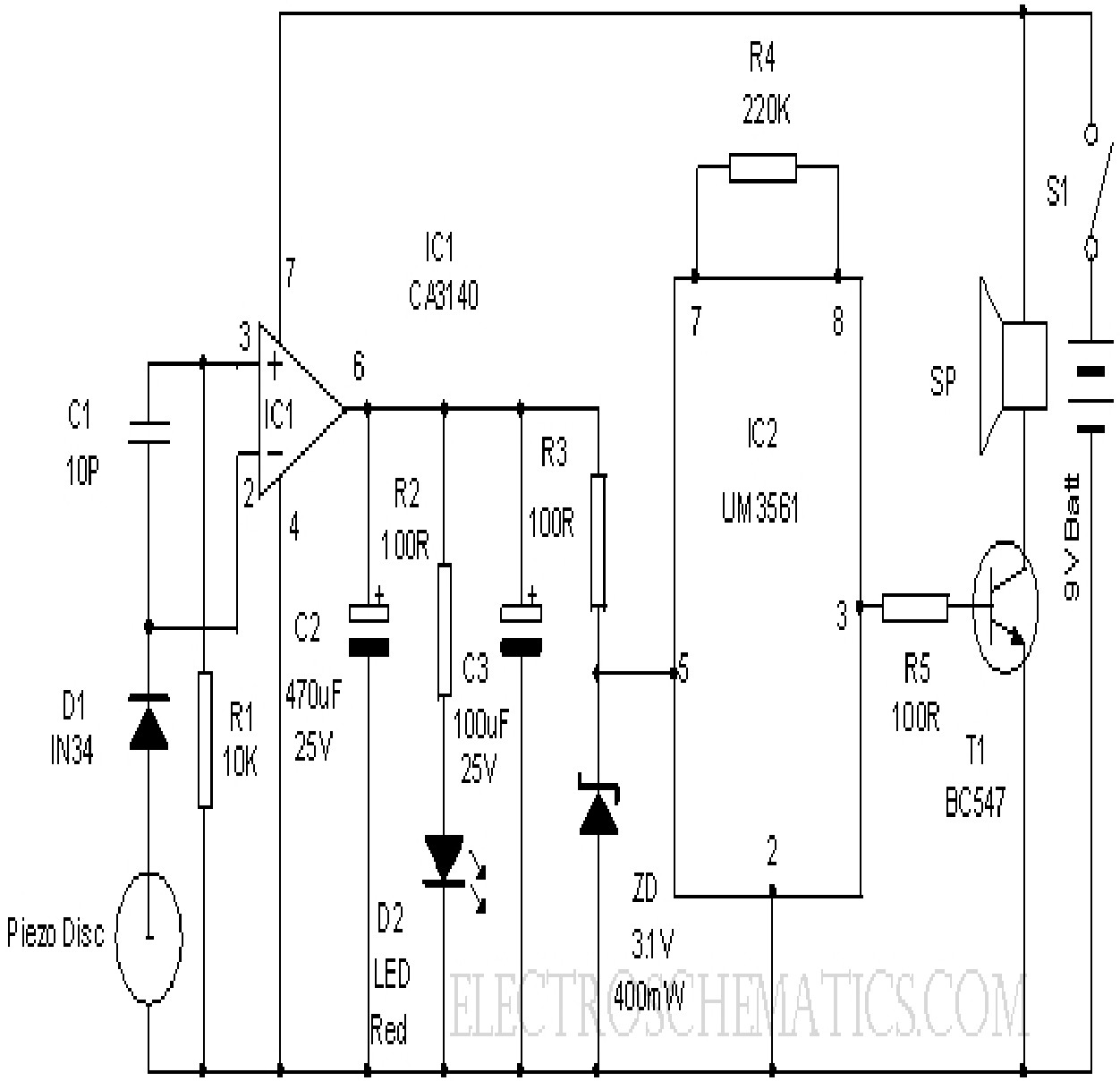
R4
220K
S1
IC1
CA3140
7
3
6
IC1
2
4
C1
10P
R2
100R
R3
100R
IC2
UM3561
7
8
SP
9 V Batt
C2
470uF
25V
C3
100uF
25V
3
5
R5
100R
T1
BC547
D1
IN34
R1
10K
2
ZD
3.1V
400mW
Piezo Disc
D2
LED
Red
ELECTROSCHEMATICS.COM