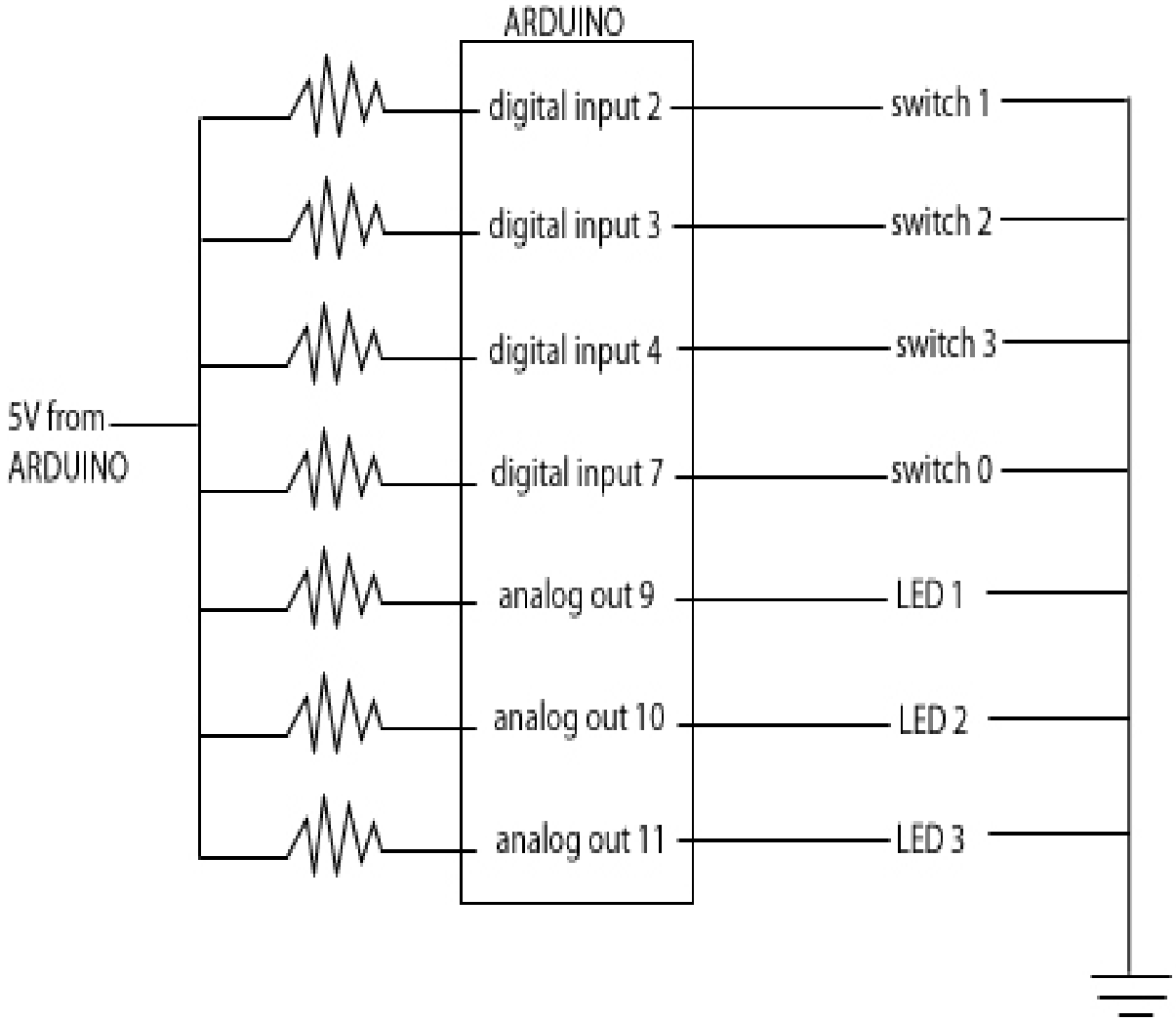
ARDUINO
digital input 2
digital input 3
digital input 4
digital input 7
analog out 9
analog out 10
analog out 11
switch 1
switch 2
switch 3
switch 0
LED 1
LED 2
LED 3
5V from
ARDUINO